105 Bonnie Drive
Butler, PA 16002
724-283-4681
724-283-5939 (fax)
www.bwieagle.com

PRODUCT INFORMATION BULLETIN

TAC-SWITCH
Critical Speed Switch
MODEL 22-8800-IS-WP

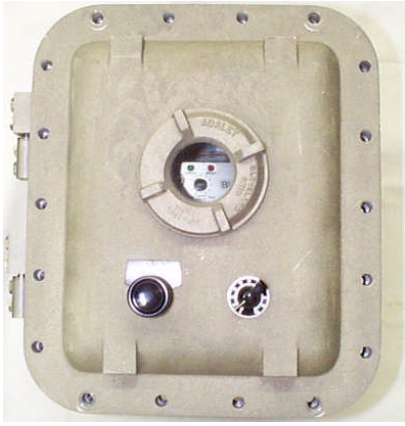

DESCRIPTION

The model 22-8800-IS-WP incorporates a modified Tac Switch and an I.S. Zener Barrier in an explosion proof enclosure for installation in hazardous locations. This configuration allows for hazardous area testing as well as speed calibration. This unit monitors speed ranges of 60 - 800 RPMs.

INSTALLATION

Disconnect AC power before proceeding with installation

1. Install the explosion proof unit in a convenient location.
2. Connect an Eagle I.S. Sensor to Zener Barrier. See I.S. Sensor installation sheet.
3. Connect relay output terminals to your control circuit.

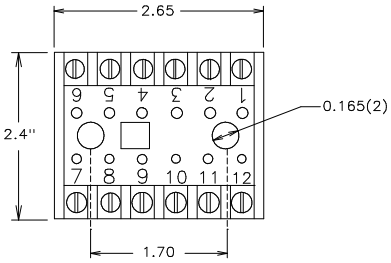

TERMINAL	CONNECTION
1	Zener Barrier - Common (-)
2	Zener Barrier - Positive (+)
3	No Connection
4	Earth Ground
5 - 6	120 VAC
7	Remote POT
8	Remote POT
9	Remote POT
*10	Relay - N/C
*11	Relay - Common
*12	Relay - N/O

I*Note - These relay contacts have been pre-wired to a remote terminal strip for easy access.

CONTROLS AND INDICATORS

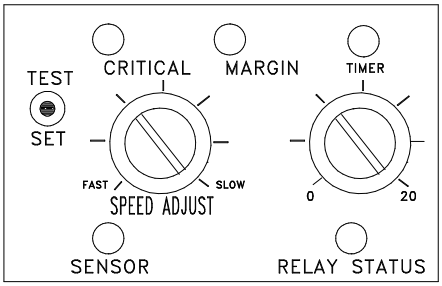

SET UP AND TESTING

Final calibration should be performed with the belt loaded and running at normal speed.

1. Turn SPEED control CCW until it stops (approximately 7 o'clock)
2. Hold switch in set position to energize relay.
3. Turn SPEED control CW slowly until CRITICAL SPEED LED stays on continuously.
4. Continue turning SPEED control until MARGIN LED begins to blink***
5. After RELAY STATUS LED is illuminated, return switch to RUN position (center)
6. A momentary TEST position is provided to simulate the loss of sensor signal which releases the control relay
7. Set timer for desired ramp-up period

*** Using the above calibration, the control relay will drop out at a machinery slow down of approximately 15% For a 20% margin, adjust the SPEED control so that the MARGIN LED just comes on steady. For a 10% margin, adjust the SPEED control CCW so that the MARGIN LED has just gone out. If a margin greater that 20% is desired, consult BWI Eagle, Inc. For ALL speed adjustments, the CRITICAL SPEED LED must stay on continuously.

TAC-SWITCH
Critical Speed Switch
MODEL 22-8800-IS-WP

SPECIFICATIONS

AC Input	120VAC 10W
Fuse Protected	1 amp
Speed Range	60 - 800 RPM
Relay Contacts	SPDT 5 amp @ 120VAC
Safety Delay	1 Second
Response Time	1 Second or Less
Start-up Timer	1 - 20 Seconds, Adjustable
Enclosure - Tac Switch	ABS Plastic
XP Enclosure	NEMA 7, NEMA 9

DIMENSIONS

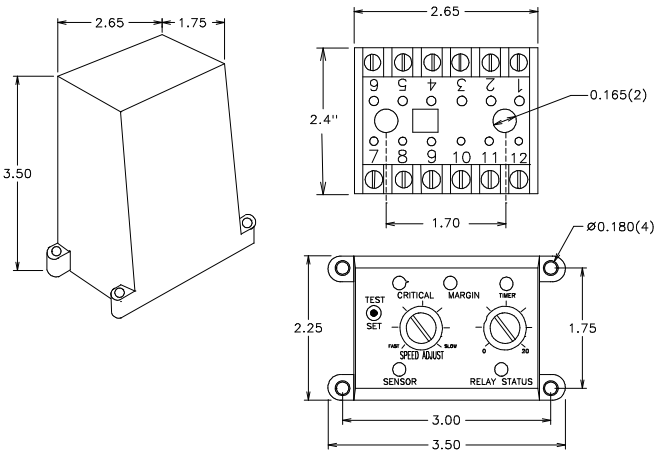

REPLACEMENT AND OPTIONAL PARTS

Control Module	22-8802-IS-WP
Mounting Socket	22-8003
I.S. Threaded PVC Proximity Sensor	10-7039
I.S. Zener Barrier	10-7071

TYPICAL BELT STARTER

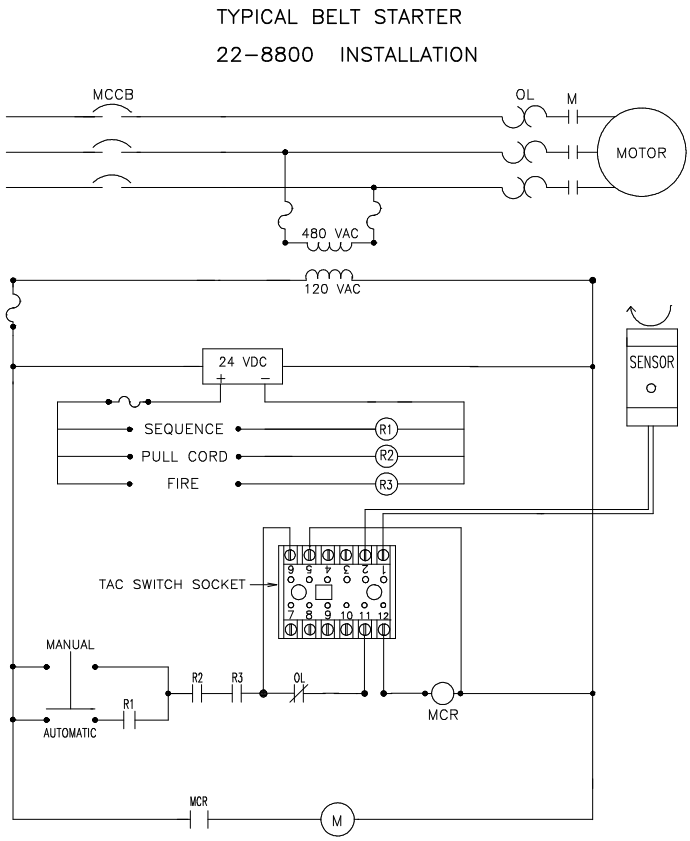

FIGURE 1

DOCUMENT DATE: 17-Apr-02

238 Pillow Street
Butler, PA 16001
(724) 283-4681
Fax (724) 283-5939
www.bwieagle.com